How to divide the electrical distribution box in a house

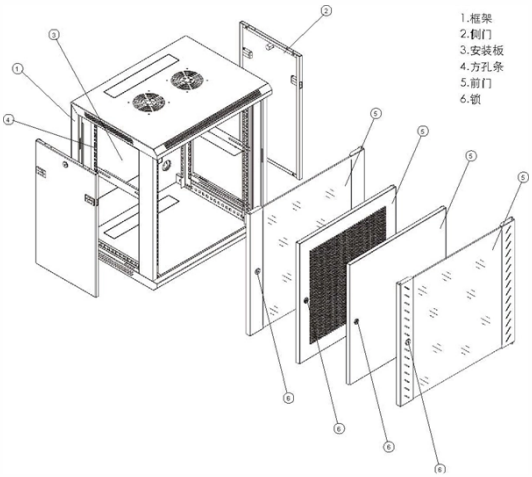

Overview

Understand the comprehensive process of installing a residential breaker box, ensuring safe power distribution and code compliance.

Key Takeaways

In residential buildings, electrical distribution boxes can be separated by using a main panel and one or more subpanels, each serving specific areas or circuits for safety and efficiency.

Main Panel and Subpanels

The main distribution panel receives power from the utility and contains the main breaker, which controls the entire building's electricity. From this panel, electricity can be routed to subpanels located in different areas, such as basements, garages, or upper floors. Subpanels act as secondary distribution points, allowing circuits to be grouped logically by location or function, such as lighting, HVAC, or kitchen appliances.

Steps to Separate Distribution Boxes

Determine Load Requirements: Calculate the total electrical load for each area to ensure the subpanel and wiring can handle the demand. This includes considering high-power appliances and future expansion. Select Appropriate Panels: Choose distribution boxes or breaker panels rated for the number of circuits needed.

© 2026 CJC FIBRE CONSULTANTS - All rights reserved

Residential panels typically range from 12 to 42 circuits, and subpanels should match the expected load. Install Proper Wiring: Use the correct wire gauge and amperage for the distance between the main panel and subpanels to prevent voltage drop and ensure safety. Copper or aluminum conductors are commonly used depending on local codes.

Grounding and Bonding: Each subpanel must be properly grounded. Often, a separate grounding electrode system, such as a ground rod, is installed for subpanels in detached structures. Neutral and ground bars should be separated in subpanels to prevent electrical hazards.

Circuit Organization: Assign circuits logically to each subpanel. For example, one subpanel may serve all lighting circuits on the second floor, while another handles kitchen and laundry appliances. Label each breaker clearly for easy identification.

Compliance with Codes: Ensure all installations comply with local electrical codes and standards, including spacing, breaker ratings, and enclosure types. Consulting a licensed electrician is highly recommended for safety and code compliance.

Advantages of Separating Distribution Boxes

Improved Safety: Limits the impact of faults to specific areas. Convenience: Easier maintenance and circuit identification. Flexibility: Allows future expansion without overloading the main panel.

Reduced Wiring Complexity: Shorter runs to circuits reduce voltage drop and material costs. By following these guidelines, residential buildings can have a safe, organized, and efficient electrical distribution system with multiple distribution boxes tailored to the building's layout and electrical needs.

Article Content

How to Wire a Breaker Box for a House

Understand the comprehensive process of installing a residential breaker box, ensuring safe power distribution and code compliance.

Electrical Distribution Box Design Guide

The document provides details for designing the electrical distribution box and circuits for a residence. It includes specifications for the main circuit breaker such as size, type, and tripping capacity.

Distribution Board Explained: How a Consumer Unit is

The distribution board is the heart of every electrical installation. This guide explains what''s inside a consumer unit, how it distributes power to every

© 2026 CJC FIBRE CONSULTANTS - All rights reserved

Organizing a Panel Box

Thus, if you have wires coming down from both sides, it makes most sense to divide wire groups. To facilitate this, panels typically have neutral and ground bus bars on both sides.

How to Wire a Home Distribution Box

In this video, we''ll walk you through the process of wiring a home distribution box with a detailed connection diagram.

Distribution Box and Selection Guide: Internal Structure, Components ...

Learn how to choose a distribution box and understand its internal structure, including MCBs, busbars, neutral bars, earth bars, RCDs, RCBOs, SPDs, enclosure ratings, and wiring layout.

Single Phase Distribution Box (DB) Wiring Diagram and Connection

Hey, in this article we are going to see the Single Phase Distribution Box Wiring Diagram and Connection Procedure. A distribution board or distribution box is where the main power supply is

"Guidelines for Household Distribution Box Specifications and ...

Installing a household distribution box requires careful attention to specifications and safety guidelines. Understanding these parameters is vital for ensuring the safety and efficiency of

How to Wire 120/240V Main Panel

The following tutorial explains how to wire split-phase (240V single-phase) circuit breakers and load points in a residential distribution panel. Split-phase or 240V

The installation requirements for the distribution box

Learn how to install a distribution box safely and correctly. Covers wiring, placement, standards, and expert tips for a compliant setup.

Reuters | Breaking International News & Views

Find latest news from every corner of the globe at Reuters , your online source for breaking international news coverage.

The Financial Express | First Financial Daily of Bangladesh

Published by Syed Nasim Manzur for International Publications Limited from Tropicana Tower (4th floor), 45, Topkhana Road, GPO Box : 2526 Dhaka- 1000

Full text of "NEW"

© 2026 CJC FIBRE CONSULTANTS - All rights reserved

Full text of "NEW" See other formats Word . the, > < br to of and a : " in you that i it he is was for - with) on (? his as this ; be at but not have had from will are they -- ! all by if him one your or up her there

U.S. News: Latest Breaking Stories and Video on National Issues

Get the latest news headlines and top stories from NBCNews . Find videos and news articles on the latest stories in the US.

Procurement Integrated Enterprise Environment (PIEE)

About PIEE. The Procurement Integrated Enterprise Environment (PIEE) is the primary enterprise procure-to-pay (P2P) application for the Department of Defense and its supporting agencies and is

How to Choose a House Distribution Box | CHINT global

A well-chosen distribution box ensures the safety and efficiency of your household electrical system. This article guides you through selecting a distribution box.

Understanding Distribution Boxes: A Comprehensive

A distribution box, also known as a power distribution box or electrical distribution box, is used to distribute electrical power safely to multiple

House Wiring | How To Select DB And It''s Position How To ...

In this video I''m showing you how many electrical Distribution box need in an house, how to calculate it''s size or space and where to install and more about house wiring. There are many ...

Related Video Reference

This video was associated with the source search result. Verify technical details against current product documentation and project requirements.

© 2026 CJC FIBRE CONSULTANTS - All rights reserved

Contact Us

Continue your research online:

Website: https://cjcconsultants.co.za
Technical inquiry: https://cjcconsultants.co.za/contact.html

This document is for preliminary research. Verify specifications against current standards, product documentation and project requirements.

© 2026 CJC FIBRE CONSULTANTS - All rights reserved