How to use a terminal box for fiber optic cables

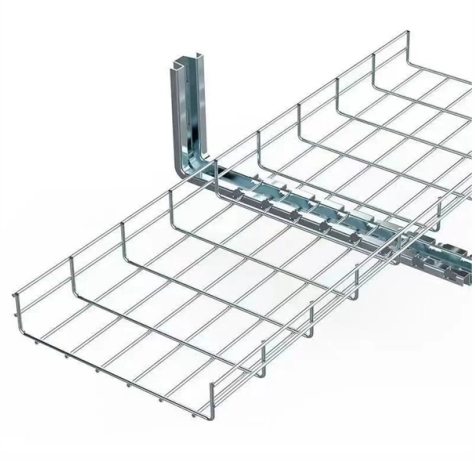

Overview

How to Install a Fiber Optic Termination Box (FTTH Steps)Learn how to install a fiber optic termination box step-by-step for FTTH projects. Covers mounting.

Key Takeaways

A fiber optic terminal box is used to securely terminate, splice, and organize fiber cables while protecting them from damage and maintaining signal integrity. Purpose of a Fiber Optic Terminal BoxA fiber optic terminal box serves as the junction between incoming fiber cables and outgoing customer-side fibers. It protects fibers from bending, dust, and accidental handling, organizes cables to prevent entanglement, and allows easy access for maintenance or network expansion.

Terminal boxes can house splice trays, adapters, and pigtails, ensuring proper alignment and minimizing signal loss.

Step-by-

Step Usage1. Select and Mount the Box Choose a terminal box suitable for your environment (indoor or outdoor) and required port capacity. Mount it on a wall, rack, or desktop as specified by the manufacturer.

Ensure the front panel is easily accessible and cable entry points are properly aligned. 2. Prepare Fiber Cables Inspect cables for damage and trim them to the required length.

© 2026 CJC FIBRE CONSULTANTS - All rights reserved

Strip the outer jacket carefully, clean the fiber ends with alcohol or a specialized cleaner, and avoid touching the fiber core to prevent contamination. 3. Splicing and Termination Insert the incoming fiber into the splice tray or adapter panel.

Use fusion splicing or mechanical splicing to connect the fiber to pigtails or adapters. Coil any excess fiber neatly inside the box to maintain the minimum bend radius and prevent signal loss. 4.

Routing and Organization Route fibers along the designated channels or trays inside the box. Ensure fibers are not pinched or bent sharply. Use cable ties or clips if necessary to keep fibers organized and prevent tangling.

5. Labeling Label each fiber connection clearly to identify the source and destination. This simplifies future maintenance and troubleshooting.

6. Testing and Verification After installation, test each fiber connection using a fiber optic power meter or OTDR to verify signal quality. Check for weak or lost signals and correct any issues before closing the box.

7. Maintenance Regularly inspect the terminal box for dust, moisture, or loose connections. Replace damaged components promptly to maintain network performance.

Tips for Best Practices

Avoid over-tightening fibers or adapters. Use the correct type of adapter panel (SC, ST, LC, etc.) for your network. Keep the box accessible for future upgrades or repairs.

For outdoor installations, ensure the box is weatherproof and sealed against moisture. By following these steps, a fiber optic terminal box can provide a secure, organized, and maintainable termination point for fiber optic networks, ensuring long-term reliability and optimal signal performance.

Article Content

How to Install a Fiber Optic Termination Box (FTTH Steps)

Learn how to install a fiber optic termination box step-by-step for FTTH projects. Covers mounting, splicing, routing, labeling, and testing for indoor/outdoor use.

Fiber Termination Box Installation & Maintenance Guide

Learn everything about fiber termination boxes—types, installation steps, and maintenance tips to ensure reliable fiber optic network performance.

How to Use a Fiber Optic Termination Box

© 2026 CJC FIBRE CONSULTANTS - All rights reserved

In this 60 second video, we go over why you should use a fiber optic termination box. If you''re running an assembly more than 2 strands, we recommending terminating it within a box

101 Guidelines for Fiber Termination Box

You can run a low-voltage power cord into the box, which will not generate strong interference affecting the performance of fiber optic cables, and fix it in the pre-installed power

FTTH Wall Box Installation Guide: How to Set Up an Indoor Fiber

For telecom installers, broadband technicians and network managers, a properly installed FTTH wall box is the core of a reliable indoor fiber optic network. It houses fiber terminations, splices

Fiber Termination Boxes: A Beginner''s Guide to

A Fiber Termination Box, also known as a Fiber Distribution Box, is a crucial component in fiber optic networks. It serves as a termination point for

Comprehensive Guide to FTB: Installation and Maintenance

Proper installation and maintenance of fiber optic termination boxes is critical to ensuring the reliability, performance and longevity of your fiber optic network.

How to Install a Fiber Termination Box

Fiber termination box is an essential component in fiber optic communication systems that facilitates the routing and protection of fiber optic cables. The following steps provide a detailed

Ultimate Guide to Fiber Optic Distribution Box: Types ...

In this article, we will delve into the world of fiber optic distribution boxes - what they are, their importance, types, installation process, advantages, common challenges, maintenance

16/24/48 Core FTTH ABS Fiber Optic Terminal Box

Product Details This terminal box serves as a crucial termination point in FTTX communication networks. It connects feeder cables with drop cables,

How to Connect Fiber Optic Cable to Router: Top 5

Learn how to connect fiber optic cable to router with our step-by-step guide. Optimize your home network for speed and reliability!

12 Fiber Optic Terminal Box / Digital Video Terminals, 12 Fiber Optic ...

© 2026 CJC FIBRE CONSULTANTS - All rights reserved

1. AlphaAmbient temperature: -25 - +40 Degrees Celsius 2. Relative Humidity: Less than or equal to 85% (+30 Degrees Celsius) 3. Atmospheric pressure: 70kPa - 106kPa 4. Insulation resistance: cable

How to Fix a Cut Fiber Optic Cable

While a cut or damaged fiber optic cable can temporarily take your network down, it is possible to quickly fix the cable with the right tools. This wikiHow article will teach you how to splice a

dominican-fiber-optic-terminal-box-manufacturer

24 Companies and suppliers for dominican-fiber-optic-terminal-box-manufacturer Find wholesalers and contact them directly Leading B2B martketplace Find companies now!

2 Port SC/APC Surface Mount Fiber Termination Enclosure

The compact indoor fiber terminal box comes with 2 sc ports which providing optical interface for connecting the subscriber''s patch cable. It is of ABS plastic providing protection for drop cable and

How to Connect Fiber Optic Cable to Router: A Step-by-Step Guide

However, setting up a fiber optic connection to your router can seem daunting if you''re unfamiliar with the process. In this guide, we''ll walk you through how to connect a fiber optic cable to ...

Ultimate Guide to Fiber Optic Distribution Box: Types

Fiber optic technology has revolutionized the telecommunications industry, enabling faster and more reliable data transmission. One essential

Fiber Optic Distribution Box

The fiber optic distribution box is the client wiring equipment in the FTTH optical network, mainly used for optical transmission terminal end fusion splicing, splitting, wiring output, and other functions. Effective

Related Video Reference

This video was associated with the source search result. Verify technical details against current product documentation and project requirements.

© 2026 CJC FIBRE CONSULTANTS - All rights reserved

Contact Us

Continue your research online:

Website: https://cjcconsultants.co.za
Technical inquiry: https://cjcconsultants.co.za/contact.html

This document is for preliminary research. Verify specifications against current standards, product documentation and project requirements.

© 2026 CJC FIBRE CONSULTANTS - All rights reserved